Trusted. Tested. Tough.®

SECTION: 2.75.195
FM0648
1026
Supersedes
0225

ZOELLER® PUMP COMPANY

MAIL TO: P.O. BOX 16347 • Louisville, KY 40256-0347
SHIP TO: 3649 Cane Run Road • Louisville, KY 40211-1961
Tel: (502) 778-2731 • 1 (800) 928-PUMP

Visit our website:
zoellerpumps.com

Product information presented here reflects conditions at time of publication. Consult factory regarding discrepancies or inconsistencies.

REPLACEMENT PARTS LIST FOR MODELS:

D295 AUTOMATIC 230V
E295 NONAUTOMATIC 230V
WD295 NONAUTOMATIC 230V

Obsolete Models	Auto/Non	Volts	PH	Obsolete Date
XE295	Nonautomatic	230	1PH	7/2003
Consult factory for all other models				

TO ORDER REPLACEMENT PARTS
PLEASE FURNISH THE FOLLOWING INFORMATION:
- Model Number.
- Part Number of Pump.
  (If manufactured prior to June 1988, give 2 letter date code following Model Number).
- Part Number and Description of part.

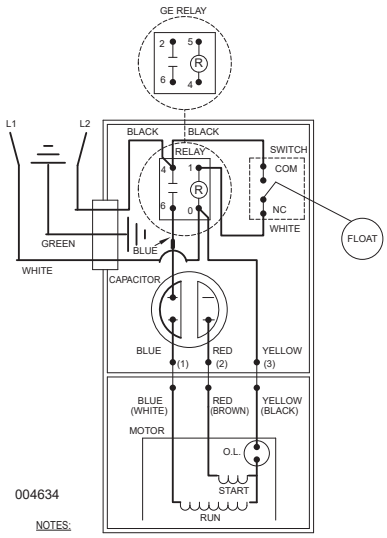

WIRING DIAGRAM FOR MODELS
"D295-A" and "D295-B"
2/85 (NR) thru 8/86 (US)

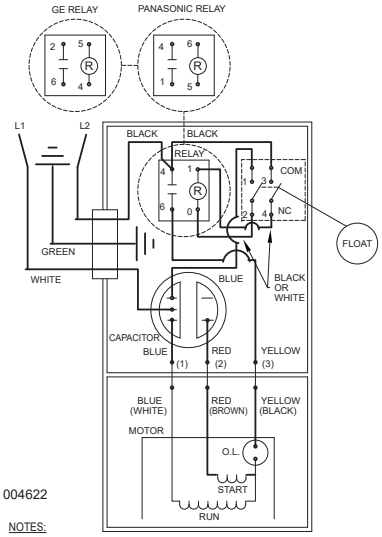

WIRING DIAGRAM FOR MODELS
"D295-C" thru "D295-H"
9/86 (VS) thru Current

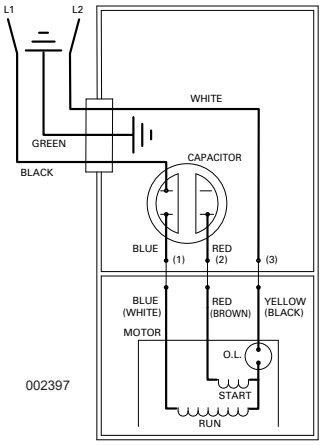

WIRING DIAGRAM FOR MODELS
"E295-A" thru "E295-G"
7/85 (TR) thru Current

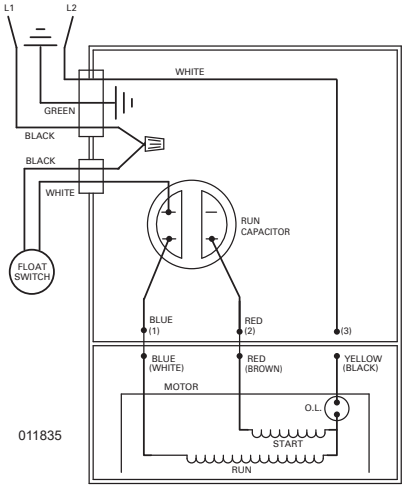

WIRING DIAGRAM FOR MODELS
"WD295-A" thru "WD295-D"
3/98 thru Current

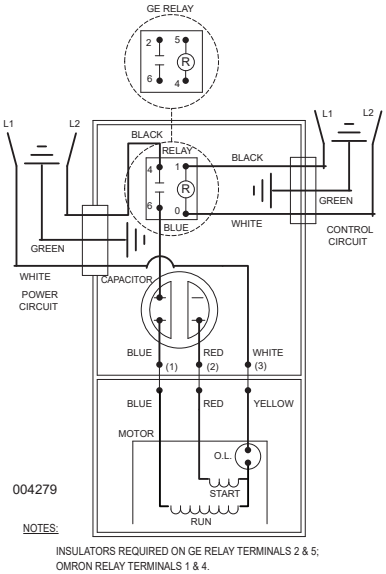

WIRING DIAGRAM FOR MODELS
"XE295-A" thru "XE295-E"
7/85 (TR) thru Current

© Copyright 2026 Zoeller® Co. All rights reserved.

REPLACEMENT PARTS LIST FOR MODEL “D295”.

See page 4 for illustration.

					MODELS:	D295-A	D295-B	D295-C	D295-D	D295-E	D295-F	D295-G	D295-H	D295-J
REF. NO.		DESCRIPTION	QTY	NOTES		2/85 NR thru 7/85 TR	8/85 UR thru 8/86 US	9/86 VS thru 5/87 RT	6/87 ST thru 4/03	5/03 thru 5/08	6/08 thru 1/16	2/16 thru 5/16	6/16 thru 2/25	3/25 thru Current
1		CASE SW & CORD 230V/1PH/14GA	1	3,4		004204	004204	004754	004754	014167	014167	014167	014167	014167
2	•	GUARD	1			001023	001023	001023	001023	001023	001023	001023	001023	001023
3		CASE-MACH "189/295"	1	3,4		004754	004754	004633	004633	014154	014154	014154	014154	014154
4	•	ARM & SEAL ASM "160/180/290"	1	4		002379	002379	004745	004745	004745	004745	004745	004745	004745
5	•	GASKET,CASE/COVER	1			001011	001011	001011	001011	001011	001011	001011	001011	001011
6		SWITCH ASM "160/180/290"	1	4		004206	004206	004744	004744	004744	004744	004744	004744	004744
¤		LEAD WIRE (WHITE)	1			004194	004194	NA	NA	NA	NA	NA	NA	NA
7	•	WIRE PKG(5)WIRES 1.5/2 HP	1			004174	004174	004751	004751	004751	004751	004751	004751	004751
8		RELAY 230V G1 (&G5)	1	2		217093	217093	217093	217093	217093	217093	153833	153833	153833
9		CAPACITOR & CLAMP ASM	1			006135	006135	006135	006135	006135	006135	006135	006135	006135
10		FLOAT,PLASTIC	1			094039	094039	094039	094039	094039	094039	094039	094039	094039
11		GUIDE ASM,FLT ROD	1			001072	001072	001072	001072	001072	001072	001072	001072	001072
12		ROD ASM,FLT	1			001043	001043	001043	001043	001043	150438	150438	150438	158668
13		HOUSING,MTR-&STR230/1P/1.5-2HP	1	1		004100	004100	004100	004993	004993	019233	019233	019233	019233
14	•	BEARING, UPPER SLEEVE	1			001012	001012	001012	001012	001012	NA	NA	NA	NA
	•	BEARING, UPPER BALL				NA	NA	NA	NA	NA	006703	006703	006703	006703
15	•	HANDLE	1			217069	217069	217069	217069	217069	217069	217069	217069	217069
16		CORD TERM&SEAL 20'/230V/20A/A	1	3		004205	004374	004374	004374	014174	014174	014174	014174	014174
17		CLAMP,#6 AUTO-SS	1	3		001769	001769	001769	001769	013764	013764	013764	013764	013764
18	•	SEAL,CORD-ASM&STR RLF T&B 14GA	1	3		004099	004375	004375	004375	015634	015634	015634	015634	015634
19	•	PLUG,TEST-WHITE	2			034090	034090	034090	034090	034090	034090	034090	034090	034090
20	•	SEAL,THRU WALL TERM	3			003402	003402	003402	003402	003402	003402	003402	003402	003402
21		ROTOR & BRG ASM 230/1P/1.5-2HP	1			004101	004101	004101	004994	004994	019225	019225	019225	019225
22	•	BEARING,RADIAL	1			001013	001013	001013	001013	001013	010069	010069	010069	010069
23	•	SEAL,MTR HSG	1			001014	001014	001014	001014	001014	001014	001014	001014	001014
24	•	OIL,DIELECTRIC-(38 OZ CAN)	1			002383	002383	002383	002383	003168	011066	011066	011066	011066
25		ADAPTER-MACH	1			001003	001003	001003	001003	001003	001003	001003	001003	001003
26	•	SEAL,SHAFT	1			002430	002430	002430	002430	002430	002430	002430	002430	002430
27		FLANGE PKG 2"NPT	1			10-1305	10-1305	10-1305	10-1305	10-1305	10-1305	10-1305	10-1305	10-1305
		FLANGE PKG 3"NPT				10-1306	10-1306	10-1306	10-1306	10-1306	10-1306	10-1306	10-1306	10-1306
28		IMPELLER "295" BRONZE	1			004173	004173	004173	004173	004173	004173	004173	154006	154006
		IMPELLER "295" CAST IRON				NA	NA	NA	NA	NA	NA	NA	154003	154003
		IMPELLER "295" PLASTIC				NA	NA	NA	NA	NA	NA	NA	159905	159905
29		HOUSING,PUMP-MACH	1			001005	001005	001005	001005	001005	001005	001005	001005	158241
30	•	SCREW,#10-24 X.375 RHM-SL SS	2			001883	001883	001883	001883	001883	001883	001883	001883	001883
31	•	SCREW,#6-32X.25RHM SL TC STLGR	5			001877	001877	001877	001877	001877	001877	001877	001877	001877
32	•	SCREW,.25-20 X .75 HHM-SS	4			001916	001916	001916	001916	001916	001916	001916	001916	001916
33	•	SCREW,#6-32X.438RHSLTP"1"STLZI	2			001877	001877	004644	004644	004644	004644	004644	004644	004644
34	•	SCREW,.5-13 X 2 HH CAP-SS	2			001909	001909	001909	001909	001909	001909	001909	001909	001909
35	•	WASHER,SS-1.25"ODX.562"IDX.078	2			002115	002115	002115	002115	002115	002115	002115	002115	002115
36	•	SCREW,.313-18 X 1"HH CAP-SS	4			002608	002608	002608	002608	002608	002608	002608	002608	002608
37	•	SCREW, .25-20X1" HHM-SS	4			007790	007790	007790	007790	007790	007790	007790	007790	007790
¤		REBUILD KIT "189/295"	1			004179	004583	004753	004753	016103	019647	019647	019647	019647

• Items included in Rebuild Kit. ¤ Not Shown in Illustration.

NOTES FOR MODEL D295:

1) Mtr. Hsg., Brg., Stator & Term. (Item 13) is preassembled at the factory and must be replaced as a unit. Stator is permanently attached to the Motor Housing. Plug (Item 19), Seal, Thru Wall Term. (Item 20) and Bearing - Upper (Item 14) are replaceable.
2) Relay “W1” and “W2” Series is not in pump but is in the high level control. See FM0456 “W1” Parts List or FM0457 “W2” Parts List for relay part number.
3) If an “X” follows Model No., or Date Mfg. on brass ID tag, consult factory for ordering of this part.
4) When ordering these parts, customer must identify if switch is a General Electric switch.
5) See FM0160 Parts Price Sheet for listing of parts prices.
6) “NA” indicates, not applicable.

© Copyright 2026 Zoeller® Co. All rights reserved.

REPLACEMENT PARTS LIST FOR MODEL “E295”.

See page 4 for illustration.

					MODELS:	E295-A	E295-B	E295-C	E295-D	E295-E	E295-F	E295-G	E295-H
REF. NO.		DESCRIPTION	QTY	NOTES		2/85 NR thru 7/85 TR	8/85 UR thru 8/86 US	9/86 VS thru 5/87 RT	6/87 ST thru 4/03	5/03 thru 5/08	6/08 thru 5/16	6/16 thru 2/25	3/25 thru Current
1	•	HANDLE	1			217069	217069	217069	217069	217069	217069	217069	217069
2		COVER & CORD 230V/1P "189/295"	1	2		004097	004097	004097	004097	014162	014162	014162	014162
3		COVER-MACH 14GA CD	1	2		002699	004372	004372	004372	014150	014150	014150	014150
4	•	GASKET,CASE/COVER	1			001011	001011	001011	001011	001011	001011	001011	001011
5	•	WIRE PKG(5)WIRES 1.5/2 HP	1			004174	004174	004751	004751	004751	004751	004751	004751
6		CAPACITOR & CLAMP ASM	1			006135	006135	006135	006135	006135	006135	006135	006135
7		HOUSING,MTR-&STR230/1P/1.5-2HP	1	1		004100	004100	004100	004993	004993	019233	019233	019233
8		BEARING, UPPER SLEEVE	1			001012	001012	001012	001012	001012	NA	NA	NA
	•	BEARING, UPPER BALL				NA	NA	NA	NA	NA	006703	006703	006703
9		CORD TERM&SEAL 20'/230V/20A/NA	1	2		004098	004376	004376	004376	014175	014175	014175	014175
10		CLAMP,#6 AUTO-SS	1	2		001769	001769	001769	001769	013764	013764	013764	013764
11	•	SEAL,CORD-ASM&STR RLF T&B 14GA	1	2		004099	004375	004375	004375	015634	015634	015634	015634
12	•	PLUG,TEST-WHITE	2			034090	034090	034090	034090	034090	034090	034090	034090
13	•	SEAL,THRU WALL TERM	3			003402	003402	003402	003402	003402	003402	003402	003402
14		ROTOR & BRG ASM 230/1P/1.5-2HP	1			004101	004101	004101	004994	004994	019225	019225	019225
15	•	BEARING,RADIAL	1			001013	001013	001013	001013	001013	010069	010069	010069
16	•	SEAL,MTR HSG	1			001014	001014	001014	001014	001014	001014	001014	001014
17	•	OIL,DIELECTRIC-(38 OZ CAN)	1			002383	002383	002383	002383	003168	011066	011066	011066
18		ADAPTER-MACH	1			001003	001003	001003	001003	001003	001003	001003	001003
19	•	SEAL,SHAFT	1			002430	002430	002430	002430	002430	002430	002430	002430
20		FLANGE PKG 2"NPT	1			10-1305	10-1305	10-1305	10-1305	10-1305	10-1305	10-1305	10-1305
		FLANGE PKG 3"NPT	1			10-1306	10-1306	10-1306	10-1306	10-1306	10-1306	10-1306	10-1306
21		IMPELLER "295" BRONZE	1			004173	004173	004173	004173	004173	004173	154006	154006
		IMPELLER "295" CAST IRON				NA	NA	NA	NA	NA	NA	154003	154003
		IMPELLER "295" PLASTIC				NA	NA	NA	NA	NA	NA	159905	159905
22		HOUSING,PUMP-MACH	1			001005	001005	001005	001005	001005	001005	001005	158241
23	•	SCREW,#6-32X.25RHM SL TC STLGR	3			001877	001877	001877	001877	001877	001877	001877	001877
24	•	SCREW,#10-24 X.375 RHM-SL SS	1			001883	001883	001883	001883	001883	001883	001883	001883
25	•	SCREW,.25-20 X .75 HHM-SS	4			001916	001916	001916	001916	001916	001916	001916	001916
26	•	SCREW,.5-13 X 2 HH CAP-SS	2			001909	001909	001909	001909	001909	001909	001909	001909
27	•	WASHER,SS-1.25"ODX.562"IDX.078	2			002115	002115	002115	002115	002115	002115	002115	002115
28	•	SCREW, .313-18X1" HH CAP-SS	4			002608	002608	002608	002608	002608	002608	002608	002608
29	•	SCREW, .25-20X1" HHM-SS	4			007790	007790	007790	007790	007790	007790	007790	007790
¤		REBUILD KIT "189/295"	1			004179	004583	004753	004753	014193	019648	019648	019648

• Items included in Rebuild Kit. ¤ Not Shown in Illustration.

NOTES FOR MODEL E295:

1) Mtr. Hsg., Brg., Stator & Term. is preassembled at the factory and must be replaced as a unit. Stator is permanently attached to the Motor Housing. Plug, Seal, Thru Wall Term. and Bearing - Upper are replaceable.
2) If an “X” follows Model No., or Date Mfg. on brass ID tag, consult factory for ordering of this part.
3) See FM0160 Parts Price Sheet for listing of parts prices.
4) “NA” indicates, not applicable.

© Copyright 2026 Zoeller® Co. All rights reserved.

REPLACEMENT PARTS ILLUSTRATION FOR MODELS “D295”.

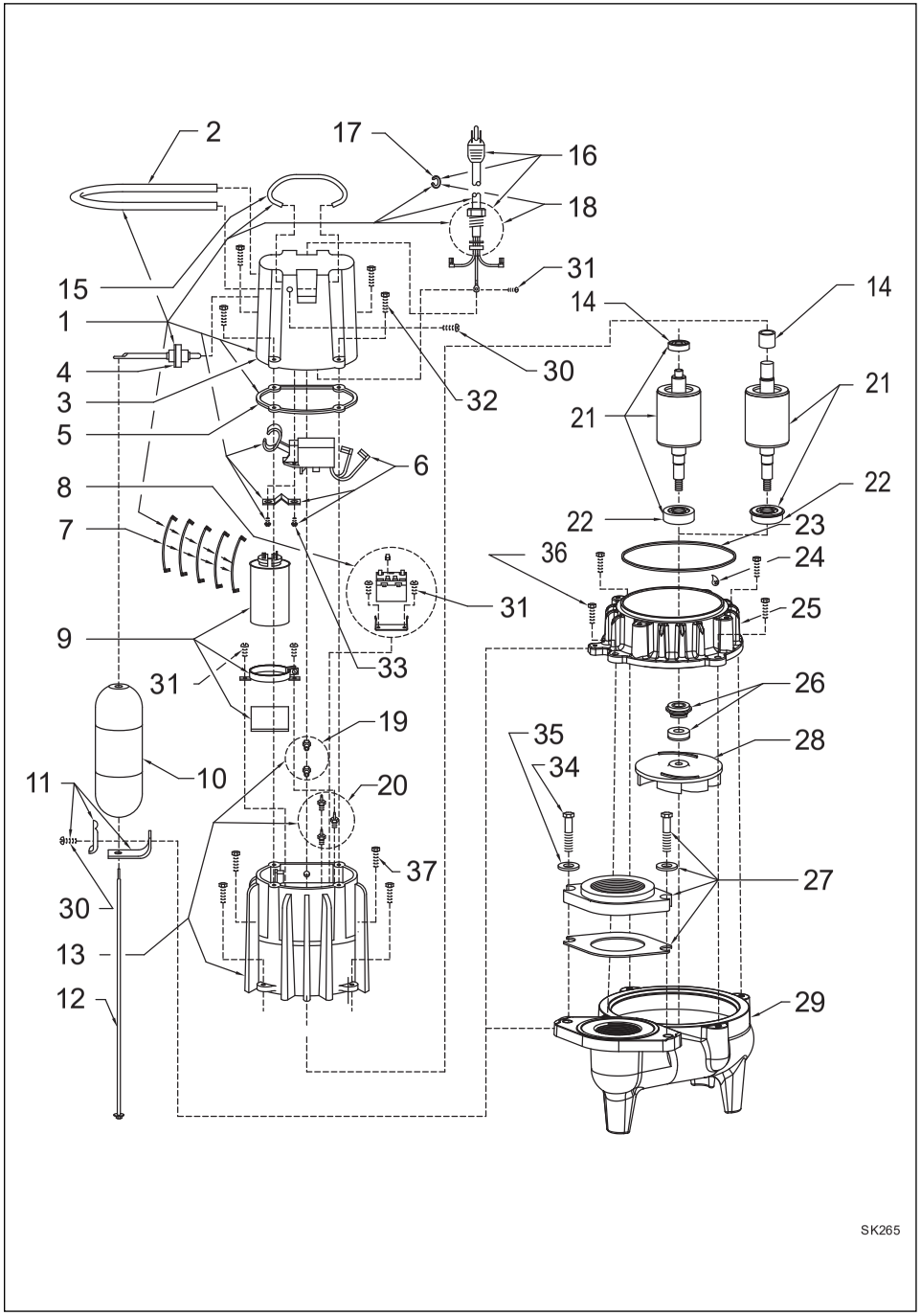

REPLACEMENT PARTS ILLUSTRATION FOR MODEL “E295”.

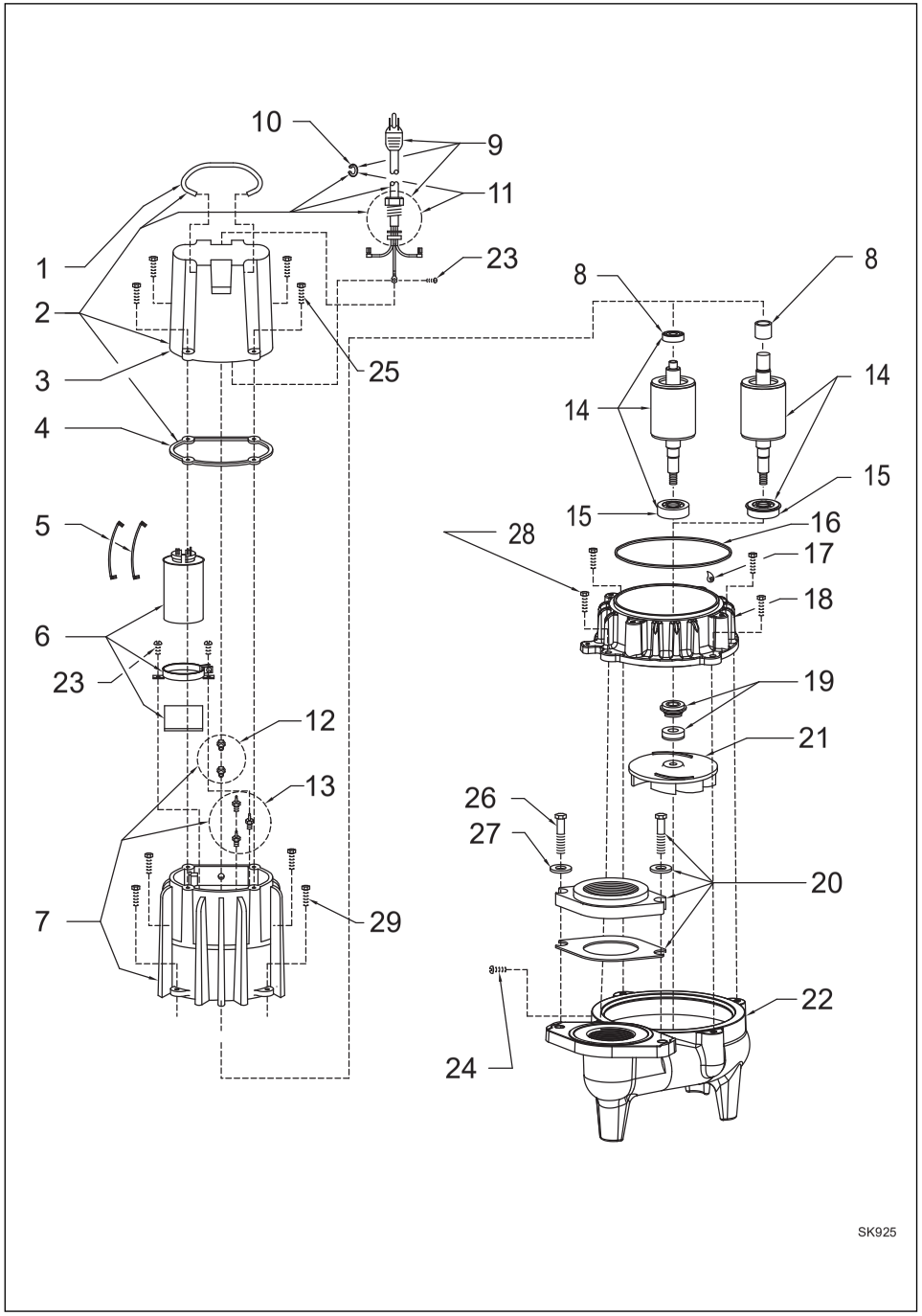

© Copyright 2026 Zoeller® Co. All rights reserved.

REPLACEMENT PARTS LIST FOR MODEL "WD295".

See page 7 for illustration.

					MODELS:	WD295-A	WD295-B	WD295-C	WD295-D	WD295-E
REF. NO.		DESCRIPTION	QTY	NOTES		3/98 thru 4/03	5/03 thru 5/08	6/08 thru 5/16	6/16 thru 2/25	3/25 thru Current
1	•	HANDLE	1			217069	217069	217069	217069	217069
2		COVER & CORD & SWITCH	1	2		011874	016113	016113	016113	016113
3		CORD TERM SEAL 20'/230V/20A	1	2		015353	016115	016115	016115	016115
4		FLOAT SWITCH, TERM & SEAL	1			011876	011876	011876	011876	011876
5	•	SEAL, CORD-ASM & RLF	1	2		004375	015634	015634	015634	015634
6	•	SEAL, FLOAT SWITCH CORD-ASM & STR RLF	1			094032	094032	094032	094032	094032
7		CONNECTOR, WIRENUT	1			003753	003753	003753	003753	003753
8		COVER-MACH & HANDLE ASM	1			011078	016105	016105	016105	016105
9	•	GASKET, CASE/COVER	1			001011	001011	001011	001011	001011
10	•	WIRE PKG(5) WIRES 1.5/2HP	1			004751	004751	004751	004751	004751
11		CAPACITOR & CLAMP ASM	1			006135	006135	006135	006135	006135
12		HOUSING, MTR-& STR 230V/1PH/1.5-2HP	1	1		004993	004993	019233	019233	019233
13		BEARING, UPPER SLEEVE	1			001012	001012	N/A	N/A	N/A
	•	BEARING, UPPER BALL				NA	NA	006703	006703	006703
14	•	PLUG, TEST-WHITE	2			034090	034090	034090	034090	034090
15	•	SEAL, THRU WALL TERM	3			003402	003402	003402	003402	003402
16		ROTOR & BRG ASM 230V/1PH/1.5-2HP	1			004994	004994	019225	019225	019225
17	•	BEARING, RADIAL	1			001013	001013	010069	010069	010069
18	•	SEAL, MTR HSG	1			001014	001014	001014	001014	001014
19	•	OIL, DIELECTRIC-(38 OZ CAN)	1			002383	002383	011066	011066	011066
20		ADAPTER-MACH	1			001003	001003	001003	001003	001003
21	•	SEAL, SHAFT	1			002430	002430	002430	002430	002430
22		IMPELLER "295" BRONZE	1			004173	004173	004173	154006	154006
		IMPELLER "295" CAST IRON				NA	NA	NA	154003	154003
		IMPELLER "295" PLASTIC				NA	NA	NA	159905	159905
23		HOUSING, PUMP-MACH	1			001005	001005	001005	001005	158241
24		FLANGE PKG 2" NPT	1			217024	217024	217024	217024	217024
		FLANGE PKG 3" NPT	1			317024	317024	317024	317024	317024
25	•	SCREW, .25-20 X .75 HHM-SS	4			001916	001916	001916	001916	001916
26	•	SCREW, .25-20 X 1" HHM-SS	4			007790	007790	007790	007790	007790
27	•	SCREW, .313-18 X 1" HH CAP-SS	4			002608	002608	002608	002608	002608
28	•	SCREW, #6-32 X .25 RHM SI TC STLGR	3			001877	001877	001877	001877	001877
29	•	SCREW, .5-13 X 2 HH CAP-SS	2			001909	001909	001909	001909	001909
30	•	WASHER, SS-1.25"ODX.562"IDX.078	2			002115	002115	002115	002115	002115
31	•	SCREW, #10-24 X .375 RHM-SI SS	1			001883	001883	001883	001883	001883
¤		REBUILD KIT	1			011877	014193	019648	019648	019648

• Items included in Rebuild Kit. ¤ Not Shown in Illustration.

NOTES FOR MODEL WD295:

1) Mtr. Hsg., Brg., Stator & Term. is preassembled at the factory and must be replaced as a unit. Stator is permanently attached to the Motor Housing. Plug, Seal, Thru Wall Term. and Bearing - Upper are replaceable.
2) If an "X" follows Model No., or Date Mfg. on brass ID tag, consult factory for ordering of this part.
3) See FM0160 Parts Price Sheet for listing of parts prices.
4) "NA" indicates, not applicable.

© Copyright 2026 Zoeller® Co. All rights reserved.

REPLACEMENT PARTS LIST FOR MODEL “XE295”.

See page 7 for illustration.

				MODELS:	XE295-A	XE295-B	XE295-C	XE295-D	XE295-E
REF. NO.	DESCRIPTION	QTY	NOTES		2/85 NR thru 7/85 TR	8/85 UR thru 8/86 US	9/86 VS thru 5/87 RT	6/87 ST thru 3/98	4/98 thru 7/03
1	• HANDLE	1			217069	217069	217069	217069	217069
2	COVER & CORDS "XE189 & XE295"	1	2		004280	004280	004280	004280	011040
3	CORD TERM&SEAL 20'/230V/20A	1	2		004098	004376	004376	004376	004376
4	• SEAL,CORD-ASM&STR RLF T&B 14GA	1	2		004099	004375	004375	004375	004375
5	CLAMP,#6 AUTO-SS	1	2		001769	001769	001769	001769	NA
6	CORD TERM&SL-CTRL"XE189/XE295"	1			004281	004377	004377	004377	011042
7	SEAL,CORD-ASM&STR RLF T&B 18GA	1			002351	004378	004378	004378	094032
8	CLAMP,STRAIN RELIEF-RED	1	2		001770	001770	001770	001770	001770
9	COVER-MACH RMT PLT 14GA	1			004276	004373	004373	004373	008857
10	• GASKET,CASE/COVER	1			001011	001011	001011	001011	001011
11	• WIRE PKG(5)WIRES 1.5/2 HP	1			004174	004174	004751	004751	004751
12	RELAY 230V G1 (&G5)	1			217093	217093	217093	217093	217093
13	CAPACITOR & CLAMP ASM	1			006135	006135	006135	006135	006135
14	HOUSING,MTR-&STR230/1P/1.5-2HP	1	1		004100	004100	004100	004993	004993
15	BEARING,SLEEVE	1			001012	001012	001012	001012	001012
16	• PLUG,TEST-WHITE	2			034090	034090	034090	034090	034090
17	• SEAL,THRU WALL TERM	3			003402	003402	003402	003402	003402
18	ROTOR & BRG ASM 230/1P/1.5-2HP	1			004101	004101	004101	004994	004994
19	• BEARING,RADIAL	1			001013	001013	001013	001013	001013
20	SEAL,MTR HSG	1			001014	001014	001014	001014	001014
21	• OIL,DIELECTRIC-(38 OZ CAN)	1			002383	002383	002383	002383	002383
22	ADAPTER-MACH	1			001003	001003	001003	001003	001003
23	• SEAL,SHAFT	1			002430	002430	002430	002430	002430
24	FLANGE PKG 2"NPT	1			10-1305	10-1305	10-1305	10-1305	10-1305
	FLANGE PKG 3"NPT	1			10-1306	10-1306	10-1306	10-1306	10-1306
25	IMPELLER BR "295"	1			004173	004173	004173	004173	004173
26	HOUSING,PUMP-MACH	1			001005	001005	001005	001005	001005
27	• SCREW,.25-20 X .75 HHM-SS	4			001916	001916	001916	001916	001916
28	• SCREW,.313-18 X 1"HH CAP-SS	4			002608	002608	002608	002608	002608
29	• SCREW,#10-24 X.375 RHM-SL SS	1			001883	001883	001883	001883	001883
30	• SCREW,.5-13 X 2 HH CAP-SS	2			001909	001909	001909	001909	001909
31	• WASHER,SS-1.25"ODX.562"IDX.078	2			002115	002115	002115	002115	002115
32	• SCREW,#6-32X.25RHM SL TC STLGR	4			001877	001877	001877	001877	001877
33	• SCREW, .25-20X1" HHM-SS	4			007790	007790	007790	007790	007790
¤	REBUILD KIT "189/295"	1			004179	004583	004753	004753	004753

• Items included in Rebuild Kit. ¤ Not Shown in Illustration.

NOTES FOR MODEL XE295:

1) Mtr. Hsg., Brg., Stator & Term. is preassembled at the factory and must be replaced as a unit. Stator is permanently attached to the Motor Housing. Plug, Seal, Thru Wall Term. and Bearing - Upper are replaceable.
2) If an “X” follows Model No., or Date Mfg. on brass ID tag, consult factory for ordering of this part.
3) See FM0160 Parts Price Sheet for listing of parts prices.
4) “NA” indicates, not applicable.

© Copyright 2026 Zoeller® Co. All rights reserved.

REPLACEMENT PARTS ILLUSTRATION FOR MODEL “WD295”

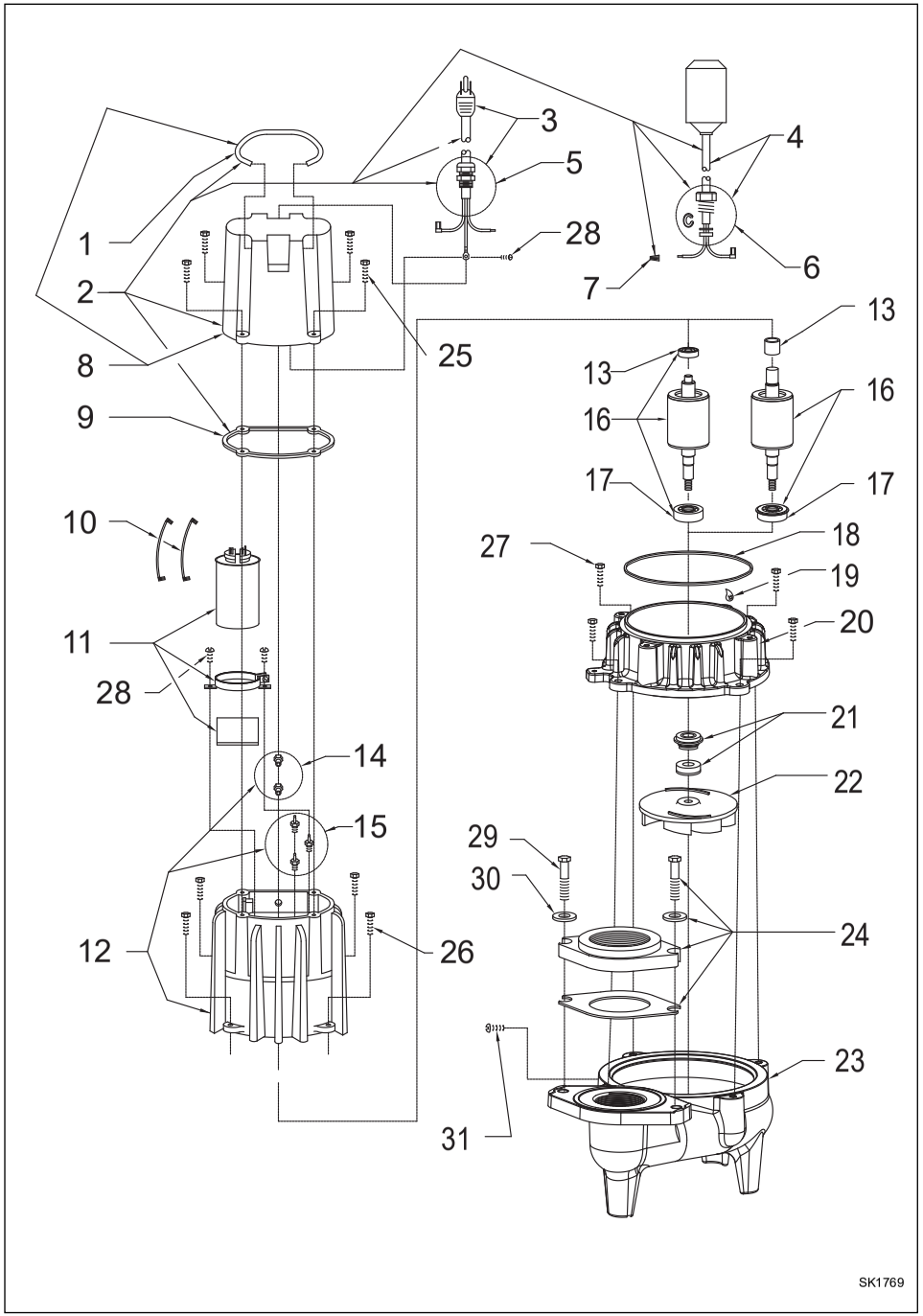

REPLACEMENT PARTS ILLUSTRATION FOR MODEL “XE295”

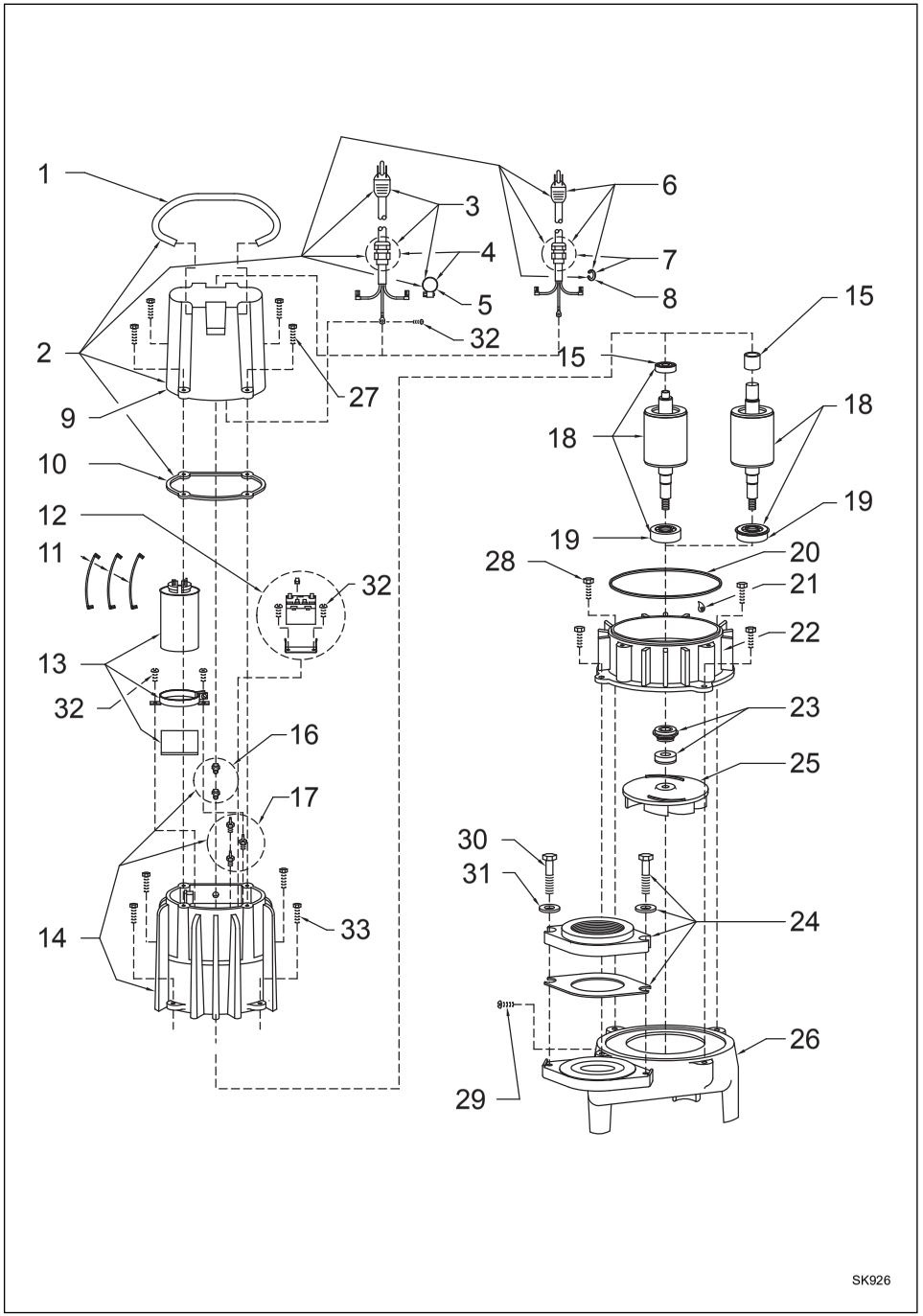

© Copyright 2026 Zoeller® Co. All rights reserved.

ZOELLER® PUMP COMPANY

MAIL TO: P.O. BOX 16347 • Louisville, KY 40256-0347
SHIP TO: 3649 Cane Run Road • Louisville, KY 40211-1961
Tel: (502) 778-2731 • 1 (800) 928-PUMP

Trusted. Tested. Tough.®

Visit our website:
zoellerpumps.com

© Copyright 2026 Zoeller® Co. All rights reserved.