Trusted. Tested. Tough.®

3.20.090
CL0031
0823
Supersedes
0123

MAIL TO: P.O. BOX 16347 • Louisville, KY 40256-0347
SHIP TO: 3649 Cane Run Road • Louisville, KY 40211-1961
Tel: (502) 778-2731 • 1 (800) 928-PUMP

Visit our website:
zoellerpumps.com

Product information presented here reflects conditions at time of publication. Consult factory regarding discrepancies or inconsistencies.

TECHNICAL DATA

CENTRIFUGAL STEP SYSTEMS

The Centrifugal STEP System is designed to be an economical and reliable solution to an onsite or low pressure sewer pumping requirement. When effluent must be pumped uphill, the Centrifugal STEP System does the job without the added cost of an extra pump tank or chamber. It is a low-cost, high-quality option for onsite enhanced flow systems, repairs to failed septic systems where gravity flow is not possible, media filters, pressure pipe dosing systems, and other alternatives that would require a separate pump chamber. The Centrifugal STEP System fits into almost any septic tank, and filters the effluent to protect your pump and drainfield components.

FILTER AREA:

- 528 linear feet of 1/16" filtration
- 396 square inches of open area

MATERIALS:

- Tank - polyethylene
- Filters - polypropylene
- All components are engineered to withstand septic tank environment
- All pump models are cast iron, 1-1/2" discharge, 115 V/1PH submersible pumps with a corrosion-resistant powder coated epoxy finish
- 1-1/4" SCH 40 PVC discharge assemblies (check valve available)
- Pipe seal for discharge pipe included

INSTALLATION:

Install per local codes and National Electrical Code
See CL0029 for installation instructions and service parts

EASY MAINTENANCE:

The discharge has a union for easy removal of the pump and floats. The filter handle aids in the removal of the filter pack. Service as needed.

LONG LIFE:

Superior quality components make a superior quality system. Easy to install, maintain, and operate.

- Standard overall height is 46".

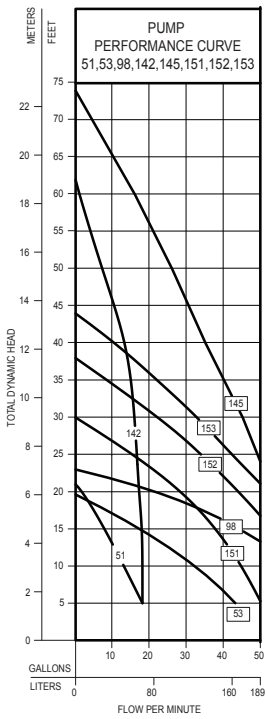

151976

© Copyright 2023. All rights reserved.

Typical Installation

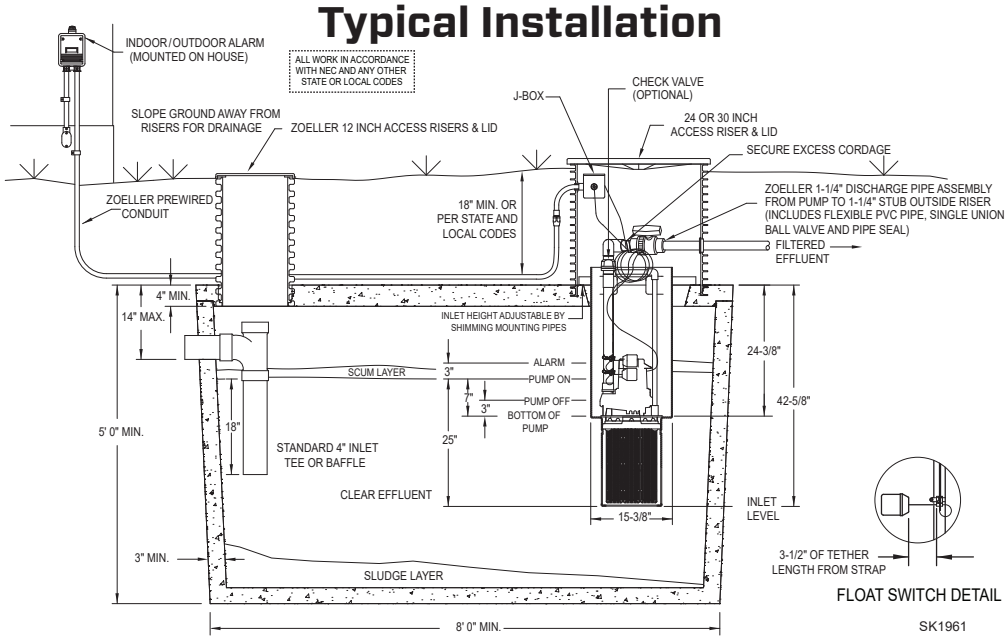

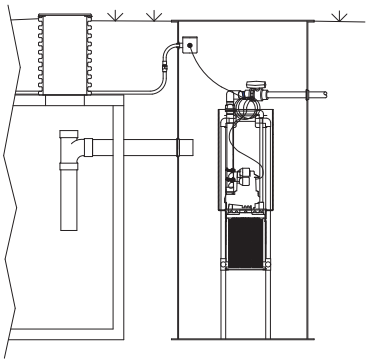

POST SEPTIC TANK APPLICATION

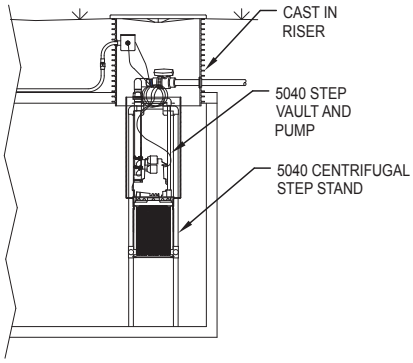

CAST IN RISER APPLICATION

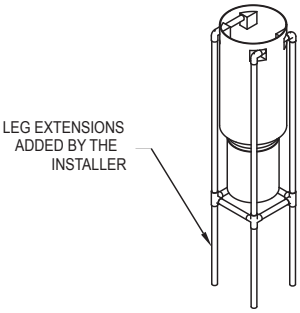

SHOWN ABOVE WITH STAND

SK2897

TOTAL DYNAMIC HEADFLOW PER MINUTE EFFLUENT AND DEWATERING

MODEL		51*		53*		98*		142		145		151		152		153	
Feet	Meters	Gal.	Liters	Gal.	Liters	Gal.	Liters	Gal.	Liters	Gal.	Liters	Gal.	Liters	Gal.	Liters	Gal.	Liters
5	1.5	18	68	43	163	-	-	18	68	-	-	50	189	-	-	-	-
10	3.0	13	50	34	129	-	-	18	68	-	-	45	170	-	-	-	-
15	4.6	8	32	19	72	45	170	18	68	-	-	38	144	-	-	-	-
20	6.1	2	8	-	-	25	95	17	64	-	-	29	110	44	167	-	-
25	7.6	-	-	-	-	-	-	16	61	49	186	16	61	34	129	42	159
30	9.1	-	-	-	-	-	-	14	53	45	171	-	-	23	87	33	125
40	12.2	-	-	-	-	-	-	7	26	35	133	-	-	-	-	22	85
50	15.2	-	-	-	-	-	-	1	4	26	99	-	-	-	-	11	42
60	18.3	-	-	-	-	-	-	-	-	16	61	-	-	-	-	-	-
Shut-off Head:		21 ft.(6.4m)		19.25 ft.(5.9m)		23 ft.(7.0m)		62 ft.(18.9m)		74 ft.(22.6m)		30 ft. (9.1m)		38 ft. (11.6m)		44 ft. (13.4m)	

** Pump powered by ZMW Zoeller Motor Works motor*

© Copyright 2023. All rights reserved.

Prepackaged Systems (Unassembled)

Centrifugal STEP Packages with Automatic Pumps (BN Models)

- ☐ 5040-0002 Automatic BN51 pkg (1, 4)
- ☐ 5040-0003 Automatic BN51 w/ alarm pkg (1, 3, 4, 5)
- ☐ 5040-0004 Automatic BN51 w/ check valve pkg (1, 2, 4)
- ☐ 5040-0005 Automatic BN51 w/ alarm and check valve pkg (1, 2, 3, 4, 5)
- ☐ 5040-0018 Automatic BN51 w/ Qwik Box (1, 4, 6)
- ☐ 5040-0019 Automatic BN51 w/ Qwik Box / alarm system (1, 3, 4, 5, 6)
- ☐ 5040-0020 Automatic BN51 w/ Qwik Box and check valve pkg (1, 2, 4, 6)
- ☐ 5040-0021 Automatic BN51 w/ Qwik Box / alarm system and check valve pkg (1, 2, 3, 4, 5, 6)
- ☐ 5040-0029 Automatic BN53 with filter, pump chamber, and pump (1, 4)
- ☐ 5040-0030 Automatic BN98 with filter, pump chamber, and pump (1, 4)
- ☐ 5040-0006 Automatic BN142 pkg (1, 4)
- ☐ 5040-0007 Automatic BN142 w/ alarm pkg (1, 3, 4, 5)
- ☐ 5040-0008 Automatic BN142 w/ check valve pkg (1, 2, 4)
- ☐ 5040-0009 Automatic BN142 w/ alarm and check valve pkg (1, 2, 3, 4, 5)
- ☐ 5040-0022 Automatic BN142 w/ Qwik Box (1, 4, 6)
- ☐ 5040-0023 Automatic BN142 w/ Qwik Box / alarm system(1, 3, 4, 5, 6)
- ☐ 5040-0024 Automatic BN142 w/ Qwik Box and check valve pkg (1, 2, 4, 6)
- ☐ 5040-0025 Automatic BN142 w/ Qwik Box / alarm system and check valve pkg (1, 2, 3, 4, 5, 6)
- ☐ 5040-0031 Automatic BN145 with filter, pump chamber, and pump
- ☐ 5040-0032 Automatic BN151 with filter, pump chamber, and pump
- ☐ 5040-0033 Automatic BN152 with filter, pump chamber, and pump
- ☐ 5040-0034 Automatic BN153 with filter, pump chamber, and pump

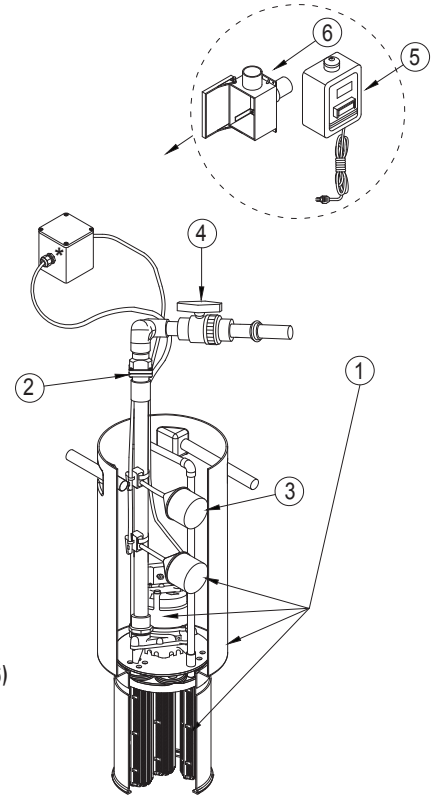

Note: All on/off alarm settings must comply with all state and local codes.

Centrifugal STEP Packages with Nonautomatic Pumps (N Models)

- ☐ 5040-0010 Nonautomatic N51 pkg (1, 4)
- ☐ 5040-0011 Nonautomatic N51 w/ control panel pkg (1, 3, 4)
- ☐ 5040-0012 Nonautomatic N51 w/ check valve pkg (1, 2, 4)
- ☐ 5040-0013 Nonautomatic N51 w/ control panel and check valve pkg (1 ,2, 3, 4)
- ☐ 5040-0035 Nonautomatic N53 with filter, pump chamber, and pump (1, 4)
- ☐ 5040-0036 Nonautomatic N98 with filter, pump chamber, and pump (1, 4)
- ☐ 5040-0014 Nonautomatic N142 pkg (1, 4)
- ☐ 5040-0015 Nonautomatic N142 w/ control panel pkg (1, 3, 4)
- ☐ 5040-0016 Nonautomatic N142 w/ check valve pkg (1, 2, 4)
- ☐ 5040-0017 Nonautomatic N142 w/ control panel and check valve pkg (1, 2, 3, 4)
- ☐ 5040-0037 Nonautomatic N145 with filter, pump chamber, and pump (1)
- ☐ 5040-0038 Nonautomatic N151 with filter, pump chamber, and pump (1)
- ☐ 5040-0039 Nonautomatic N152 with filter, pump chamber, and pump (1)
- ☐ 5040-0040 Nonautomatic N153 with filter, pump chamber, and pump (1)

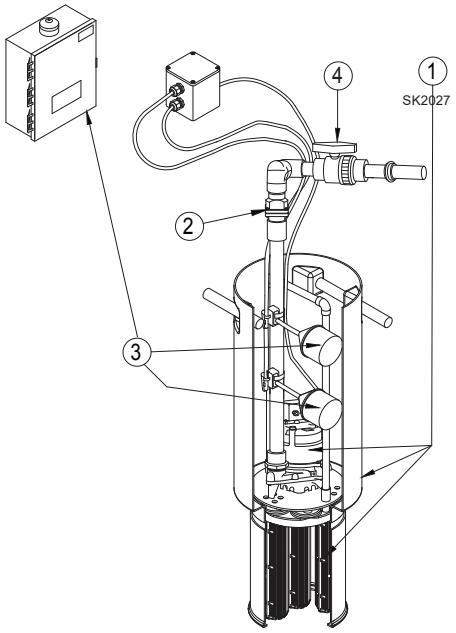

Note: It is the responsibility of the installer & designer to assure all state and local codes are met.

© Copyright 2023. All rights reserved.

Custom Applications

The following is intended to aid selection of the components needed for the widest variety of systems. Prepackaged systems (unassembled) are also available for the most commonly selected systems.

(A) Centrifugal STEP Vault

Includes filter pak with handle and pump chamber preassembled at factory.

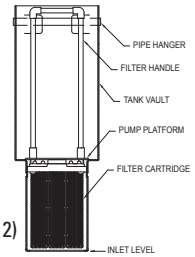

SK2031

- ☐ 5040-0001 46" Centrifugal STEP Vault Wgt. 20.0 lbs.
- ☐ 5040-0026 50" Centrifugal STEP Vault Wgt. 30.0 lbs.
- ☐ 5040-0027 63" Centrifugal STEP Vault Wgt. 30.0 lbs.
- ☐ 5040-0041 Centrifugal STEP Vault Stand (page 2)
- ☐ 5040-0042 46" Centrifugal STEP Vault w/ Stand (page 2)

(C) Discharge Assembly

Discharge pipe assembly consists of a reducer, schedule 40 PVC piping, elbows, flexible PVC pipe, union / ball valve, pipe seal, and 1-1/4" flexible stub to extend outside of riser. Preassembled and welded at the factory.

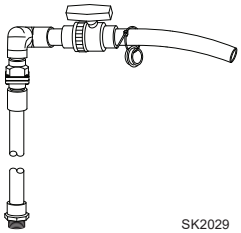
SK2029

- ☐ 170-0083 - 1-1/4" diameter - Wgt. 4.0 lbs.
- ☐ 170-0084 - 1-1/4" diameter, with check valve - Wgt. 4.0 lbs.

(E) Junction Boxes* / Pre-wired Conduit

Prewired conduits are designed to make the electrical wiring easier. Assemblies come with the correct number of wires of the correct gauge for the application. Junction box is included if needed.

For automatic or float switch control - with or without alarm:

- ☐ 5100-0011 25' long w/J-Box (3 cord seals, 2 plugs) - Wgt. 10 lbs.
- ☐ 5100-0012 35' long w/J-Box (3 cord seals, 2 plugs) - Wgt. 14 lbs.
- ☐ 5100-0013 50' long w/J-Box (3 cord seals, 2 plugs) - Wgt. 18 lbs.
- ☐ 5100-0014 75' long w/J-Box (3 cord seals, 2 plugs) - Wgt. 26 lbs.
- ☐ 5100-0015 100' long w/J-Box (3 cord seals, 2 plugs) - Wgt. 33 lbs.

For Qwik Box pump control - with or without alarm:

- ☐ 5100-0016 25' long - Wgt 10 lbs.
- ☐ 5100-0017 35' long - Wgt. 12 lbs.
- ☐ 5100-0018 50' long - Wgt. 16 lbs.
- ☐ 5100-0019 75' long - Wgt. 24 lbs.
- ☐ 5100-0020 100' long - Wgt. 31 lbs.

For control panels and nonautomatic pumps:

- ☐ 5100-0001 25' long w/J-Box (4 cord seals, 1 plug) - Wgt. 10 lbs.
- ☐ 5100-0002 35' long w/J-Box (4 cord seals, 1 plug) - Wgt. 14 lbs.
- ☐ 5100-0003 50' long w/J-Box (4 cord seals, 1 plug) - Wgt. 18 lbs.
- ☐ 5100-0004 75' long w/J-Box (4 cord seals, 1 plug) - Wgt. 26 lbs.
- ☐ 5100-0005 100' long w/J-Box (4 cord seals, 1 plug) - Wgt. 33 lbs.

NEMA 4X Junction Boxes:

Select junction box based on number of cords present in riser.

- ☐ 10-1030 4"L x 4"W x 2"H (2 UF & 2 round cord seals-unassembled) - Wgt. 1 lb.
- ☐ 10-0776 4"L x 4"W x 2"H (3 round cord seals, 3/4" hub-unassembled) - Wgt. 1 lb.
- ☐ 10-1399 4"L x 4"W x 4"H (4 round cord seals, 1-1/2" hub-unassembled) - Wgt. 2 lbs.

* Junction box not required w/ Qwik Box system.

(B) Pump

Pump should be selected based on pump performance. (All other pump models when purchased a la carte must be purchased through an authorized Zoeller Pump Company distributor.)

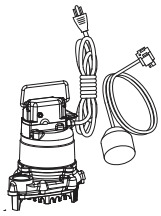
SK2030

115 V Automatic Units (BN)

- ☐ 51-0006 - Wgt. 28 lbs.
- ☐ 142-0006 - Wgt. 55 lbs.

115 V Nonautomatic Units (N)

- ☐ 51-0002 - Wgt. 27 lbs.
- ☐ 142-0002 - Wgt. 54 lbs.

(D) Control / Alarm

A high water alarm is recommended and most codes require one. For automatic pumps choose from the following alarm boxes. For nonautomatic pumps, the alarm is integral with control panel.

Qwik Box Control/Alarm System

- ☐ 10-0579 Qwik Box, 115 V - Wgt. 3 lbs.
- ☐ 10-1359 Qwik Box, 115 V w/ alarm (indoor) - Wgt. 7 lbs.

Indoor/Outdoor Alarm

- ☐ 91104-0001 Alarm System with 15' Float - Wgt. 5 lbs.
  - ☐ 10-0744 20' Mechanical Control Switch
  - ☐ 10-1877 25' Mechanical Control Switch
  - ☐ 10-1874 50' Mechanical Control Switch
- ☐ 91104-0003 Alarm System without Float - Wgt. 5 lbs.

Controls

- ☐ 10-0125 Simplex Panel, 115/230V, 1Ph, 0-20 Amps, NEMA 4X, 3 Floats - Wgt. 11.5 lbs.
- ☐ 10-0684 Timed Dose Panel 115 V, 1Ph, 0-20 Amps, NEMA 4X, ETM, Cycle Counter, 3 Floats - Wgt. 20 lbs.

Note: All variable level control switches in this section are mechanically activated and do not contain mercury.

(F) Standard Riser Systems

An access riser is required on the outlet of the septic tank for proper installation of the STEP system. Many codes require a locking latch to prevent tampering with the system.

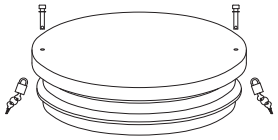
SK1838B

24" AccessRiser

- ☐ 172-0003 24" dia x 1' long - Wgt. 32 lbs.
- ☐ 172-0044 24" dia x 18" long - Wgt. 39 lbs.
- ☐ 172-0004 24" dia x 2' long - Wgt. 46 lbs.
- ☐ 172-0005 24" dia x 3' long - Wgt. 60 lbs.
- ☐ 172-0019 Adhesive (for mounting in pre-cast groove) quart- Wgt. 1 lb.
- ☐ 172-0020 Lockable Latch Assembly - Wgt. 2 lb.
- ☐ 172-0048 Seal Ring - Wgt. 5 lb.
- ☐ 172-0047 Bolt Down Kit - Wgt. 2 lb.

30" Access Riser

- ☐ 172-0029 30" dia x 1' long - Wgt. 59 lbs.
- ☐ 172-0045 30" dia x 18" long - Wgt. 75 lbs.
- ☐ 172-0030 30" dia x 2' long - Wgt. 92 lbs.
- ☐ 172-0031 30" dia x 3' long - Wgt. 125 lbs.
- ☐ 172-0019 Adhesive (for mounting in pre-cast groove) quart- Wgt. 1 lb.
- ☐ 172-0056 Lockable Latch Assembly - Wgt. 2 lbs.
- ☐ 172-0049 Seal Ring - Wgt. 5 lb.
- ☐ 172-0057 Bolt Down Kit - Wgt. 2 lb.

© Copyright 2023. All rights reserved.